PRIMON
AUTOMAZIONI

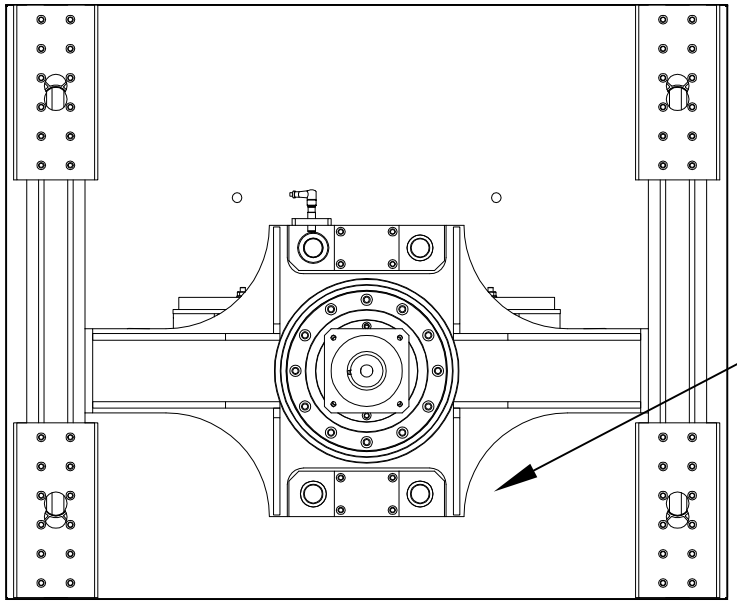

ST.010
WATER TEST STATION

WATER TEST BENCH FOR VALVES AND ACCESSORIES